UNIVERSITY OF WATERLOO
Faculty of Mathematics
Waterloo, Ontario N2L 3G1

Centre for Education in
Mathematics and Computing

Grade 6 Math Circles

October 10/11, 2017

Logic Puzzles, Brain Teasers and Math Games

Introduction

Logic puzzles, brain teasers and math games can all be fun and interesting ways to challenge yourself. Logic itself is the style of thinking which must be used in all fields mathematics. Today we will be exercising our brains in a logical/mathematical way as a warm up for the rest of the term!

Logic Puzzles

Logic puzzles have been around for centuries and can come in many different shapes and sizes. They can come in the form of a Rubik's Cube, you can see them in the back of a newspaper or magazine, and you can even find them in board games like Clue.

One way of solving logic puzzles like the ones seen in Clue is to use a grid which displays all of the possible outcomes of the situation. When you are sure one possible solution must be incorrect, you can eliminate that answer by crossing it out. When you are sure one possible solution must be correct, you can put a checkmark. Eventually, after some logical thinking, you can can narrow down the outcomes until you are left with just the correct solution(s).

Example

Three students Bryan, Sean and Tony are discussing their favourite super heroes. You want to figure out who everyone's favorite superheroes are and you want to know what age everyone is. Unfortunately you only managed to hear a few details from the conversation.

- Bryan likes Spiderman.
- Tony doesn't like Superman.
- The youngest student likes Spiderman.
- The student who likes Superman is 8.
- Everyone is a different age and likes a different hero.
- The students' ages are 6, 8 and 10 in some order.

Can you determine everyone's age and favorite hero?

Solution

This question has three categories; name, age and superhero; each one of these having three different possibilities. We can arrange all of these possibilities in a grid which will be very helpful in solving this problem.

		Superheroes			Age		
		Batman	Spiderman	Superman	6 years	8 years	10 years
Names	Bryan						
	Sean						
	Tony						
Age	6 years						
	8 years						
	10 years						

The first piece of information we were given tells us that Bryan likes Spiderman. We know this is true, so put a checkmark in the box which tells us whether or not Bryan likes Spiderman. Also, we know that everyone likes a different hero, so neither Sean or Tony like Spiderman. Additionally, this also means Bryan does not like Batman or Spiderman. Put crosses to display the students' disliking of the appropriate heroes.

The second clue tells us that Tony doesn't like Superman, so we can cross that off of our grid, and the third clue tells us that the youngest student likes Spiderman. The ages of the three students are 6, 8 and 10, so the 6 year old has to be the one that likes Spiderman.

The fourth clue tells us that the student who likes Superman is 8. We can check this off, and again, because everyone has to like a different hero, this allows us to cross out the other 2 superhero options for both the 6 and the 8 year old.

		Superheroes			Age		
		Batman	Spiderman	Superman	6 years	8 years	10 years
Names	Bryan	✗	✓	✗			
	Sean		✗				
	Tony		✗	✗			
Age	6 years	✗	✓	✗			
	8 years	✗	✗	✓			
	10 years						

Looking at the Superman column, you can see that neither Bryan or Tony like him. Because Sean is the only possible option left, he must be the one who likes Superman. This also allows us to cross out the other superheroes in Sean's row because we know he will exclusively like Superman.

The only superhero yet to be liked is Batman, and the only student whose favourite hero we are yet know is Tony's. This means Tony must be the one who likes Batman.

Finally we know that each student is a different age. The student who likes Spiderman is 6 and the student who like Superman is 8. This leaves the student who likes Batman to be 10. This is the final piece of information we can deduce from this question, so you can now fill any remaining boxes with crosses.

With the filled grid, you can see that you have the answer to your original question.

- Bryan is 6 and he likes Spiderman.
- Sean is 8 and he likes Superman.
- Tony is 10 and she likes Batman.

		Superheroes			Age		
		Batman	Spiderman	Superman	6 years	8 years	10 years
Names	Bryan	✗	✓	✗	✓	✗	✗
	Sean	✗	✗	✓	✗	✓	✗
	Tony	✓	✗	✗	✗	✗	✓
Age	6 years	✗	✓	✗			
	8 years	✗	✗	✓			
	10 years	✓	✗	✗			

Problems

1. Three girls; Angela, Lisa and Susan, met each other on their first day at logic summer camp. For an ice breaker, the girls created a logic grid to help them learn about each other's favourite colour, and what kind of pet they have. The camp counsellor who knew all of the girls' favourite colours and what pets they have decided to give them these 4 hints:

- Lisa, whose favourite colour is not green, has a fish.
- Susan's favourite colour is red.
- The girl who likes green also has a dog.
- None of the girls have the same type of pet or have the same favourite colour.

What other details can the 3 girls logically deduce about one another?

		Colors			Pets		
		blue	green	red	cat	dog	fish
Names	Angela	✗	✓	✗	✗	✓	✗
	Lisa	✓	✗	✗	✗	✗	✓
	Susan	✗	✗	✓	✓	✗	✗
Pets	cat	✗	✗	✓			
	dog	✗	✓	✗			
	fish	✓	✗	✗			

Angela has a **dog** and her favourite colour is **green**.

Lisa has a **fish** and her favourite colour is **blue**.

Susan has a **cat** and her favourite colour is **red**.

2. Amanda, Jack, Mike and Rachel each travelled to a different part of the world in a different year. You have been hired to make a scrapbook of their journeys, but you can't quite remember who went where and in what year. From looking at all of the photos you were given to put into the scrapbook, you can tell that the following 6 details must be true:

- Neither Amanda or Jack traveled in 2015.
- Mike didn't travel to Rio de Janeiro.
- Rachel traveled in 2014.
- Amanda visited London.
- Neither Mike or Rachel traveled to Tokyo.
- A man traveled in 2016.

Can you make sure you properly label their scrapbook?

		Years				Destination			
		2013	2014	2015	2016	London	Rio de Janeiro	Sydney	Tokyo
Names	Amanda	✓	✗	✗	✗	✓	✗	✗	✗
	Jack	✗	✗	✗	✓	✗	✗	✗	✓
	Mike	✗	✗	✓	✗	✗	✗	✓	✗
	Rachel	✗	✓	✗	✗	✗	✓	✗	✗
Destination	London	✓	✗	✗	✗				
	Rio de Janeiro	✗	✓	✗	✗				
	Sydney	✗	✗	✓	✗				
	Tokyo	✗	✗	✗	✓				

Amanda traveled to **London** in the year **2013**.

Jack traveled to **Tokyo** in the year **2016**.

Mike traveled to **Sydney** in the year **2015**.

Rachel traveled to **Rio de Janerio** in the year **2014**.

*3. You have been chosen to present awards to four YouTubers: Anthony, Eric, Leonard and Robert at the Teen Choice Awards. The only problem is, you can't remember all of the details about their channels! None of the channels share common properties and:

- Robert's channel has 400,000 subscribers.
- Neither the Irish YouTuber or Leonard have channels about movies.
- The movies channel has 200,000 subscribers.
- The science channel has less subscribers than the channel owned by the American.
- Neither the science or the movies channel have 400,000 subscribers.
- Anthony has a DIY channel.
- The Australian YouTuber has a channel with 200,000 more subscribers than the science channel.

		Subscribers				Channels				Countries			
		100,000	200,000	300,000	400,000	DIY	Games	Movies	Science	American	Australian	British	Irish
Youtubers	Anthony	✗	✗	✓	✗	✓	✗	✗	✗	✗	✓	✗	✗
	Eric	✗	✓	✗	✗	✗	✗	✓	✗	✓	✗	✗	✗
	Leonard	✓	✗	✗	✗	✗	✗	✗	✓	✗	✗	✓	✗
	Robert	✗	✗	✗	✓	✗	✓	✗	✗	✗	✗	✗	✓
Countries	American	✗	✓	✗	✗	✗	✗	✓	✗				
	Australian	✗	✗	✓	✗	✓	✗	✗	✗				
	British	✓	✗	✗	✗	✗	✗	✗	✓				
	Irish	✗	✗	✗	✓	✗	✓	✗	✗				
Channels	DIY	✗	✗	✓	✗								
	Games	✗	✗	✗	✓								
	Movies	✗	✓	✗	✗								
	Science	✓	✗	✗	✗								

Anthony has **300,000** subscribers on his **DIY** channel and is **Australian**.

Eric has **200,000** subscribers on his **movies** channel and is **American**.

Leonard has **100,000** subscribers on his **science** channel and is **British**.

Robert has **400,000** subscribers on his **games** channel and is **Irish**.

Math Brain Teasers

There are many tricky math questions in the world, but some are tricky for the wrong reasons. Brain teasers are a type of question which may seem simple at first, but their main goal is to mislead you. See if you can spot the tricks in each of these questions.

Example: The Missing Dollar Problem

Three friends were renting a hotel room together which cost $30 a night, so they decided to evenly split the bill and pay $10 each. After they finished paying, the hotel manager realized that the room they rented was really meant to only be $25. He went to return the $5 to the three friends, but he noticed he couldn't evenly distribute the money between them. Because the three friends did not know about the change in price, the manager decided to only return $1 to each friend, and he would keep the other $2 for himself.

Originally the three friends each payed $10 each, but with the refunded $1, they actually only spent $9 each. Overall that means they spent $27 on the room. The manager kept $2 for himself which brings the total up to $29. We started out with $30, so why do we now only have $29?

Solution

A good way to start this problem is to track the total amount of money during each step of the question.

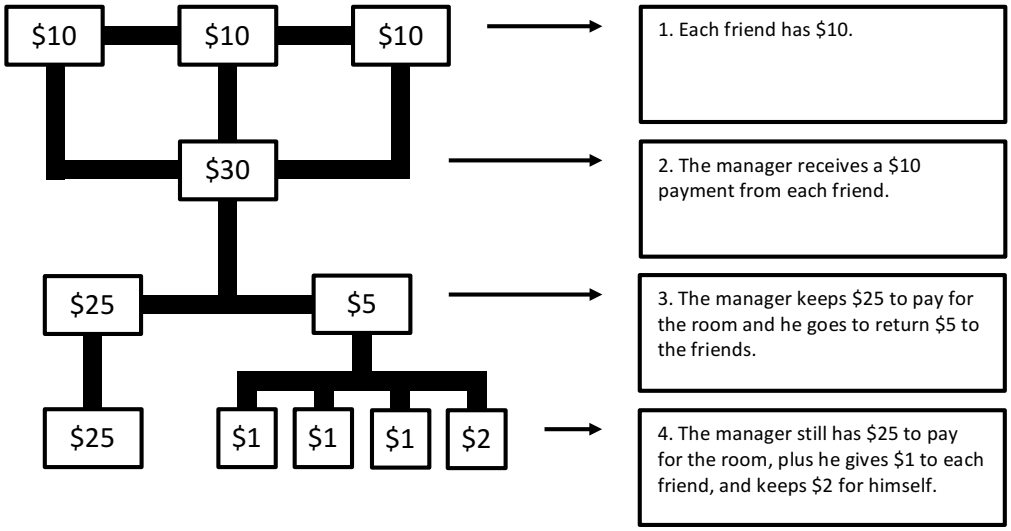

You can see that if you add up the total amount of money during each step, it is always $30. This tells us that there isn't actually a missing dollar, but instead there must be an error somewhere in the question.

So what is the error in the question?

More Tricky Problems (Think Carefully!)

1. What is the error in the "Missing Dollar Problem"?

The problem in this question is that there are unrelated sums of money which are all added together.

When the manager keeps \$2 for for himself, this is actually money that he should still be repaying to the three friends. If you have to repay or if you 'owe' someone money, you can think of it as having *negative* money.

So really, at the end of the question, the three friends spent a total of \$27, but they should still be owed another \$2. If we write this out in math terms we get:

$$Total\ money\ spent = \$27 - \$2 = \$25$$

The actual cost of the room should be \$25 so this makes sense.

Another way to think about it is:

- Each friend spent \$10 initially.
- Each friend got refunded \$1 each, so now they have effectively only spent \$9 each, and they each have an extra loonie in their pocket.

$$Total\ amount\ of\ money = \$10 + \$10 + \$10 = \$9 + \$9 + \$9 + \$1 + \$1 + \$1 = \$30$$

This is another way to see that the total amount of money in circulation is always the same.

2. A certain tree grows in such a way that it doubles in height every year. When it reaches a height of 100 feet tall, the tree will be 38 years old. How old will the tree be when it is 50 feet tall?

We know that this specific tree *doubles* in height every year. That means when the tree was 50 feet, in just one year, it will double its height to be 100 feet.

If the tree is 38 years old when it is 100 feet, that means it must have been 37 years old when it was 50 feet.

3. If a pencil and an eraser \$1.10 together, and the eraser costs \$1.00 more than the pencil does, how much does the pencil cost?

The eraser will cost \$1.05 and the pencil will cost \$0.05.

The eraser costs exactly \$1.00 more than the pencil as seen below

$$Cost\ of\ eraser = cost\ of\ pencil + \$1.00 = \$0.05 + \$1.00 = \$1.05$$
$$Total\ cost = cost\ of\ pencil + cost\ of\ eraser = \$0.05 + \$1.05 = \$1.10$$

4. In a car factory, 6 machines can make 6 wheels in 6 minutes. How long will it take 30 machines to make 30 wheels?

If 6 machines make 6 wheels in 6 minutes, that means each of the machines must make 1 wheel in 6 minutes.

If you now consider 30 machines, and we know each of these 30 machines makes 1 wheel in 6 minutes, that means all 30 machines will make 30 wheels in 6 minutes.

5. This is a famous problem called the "Monty Hall Problem", which originally comes from the gameshow "Let's Make a Deal". Here's how the problem goes:

- A gameshow contestant has to choose 1 of 3 doors, and they will receive whatever prize is hidden behind that door.
- Two of the doors contain a "zonk", a prize that nobody would ever want (like a tennis racket made of glass, or a 10 pound bag of black licorice). The other door has an awesome prize like a new car or a free vacation.
- Once the contestant chooses their door, the host will eliminate one of the zonks, and then give the contestant an opportunity to either keep the prize behind the door they chose, or they can switch to the remaining door.

The question now is, if they switch to the other door, what are their odds of winning the awesome prize?

a) 1/3

b) 1/2

c) 2/3 is the correct answer.

Before we discuss the correct answers, carefully go through each of these four questions and make sure your answer makes sense!

There are 2 zonks, and 1 prize, so when you initially choose a door, you will only have a 1/3 chance of selecting the prize. The two other doors combined then must have a 2/3 chance of containing the awesome prize.

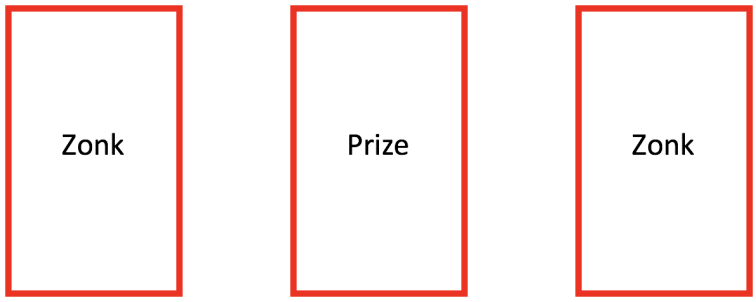

If you did not initially pick the prize door (which will happen 2/3 times), then when the host eliminates one of the zonks from the other two doors, the remaining one must have the prize!

If you switch your door, then you will get the prize 2/3 of the time.

Still not convinced? Here is a layout of all of the possibilities when you choose a door at random. In the end, if you switch each time, you will win 2/3 of the time.

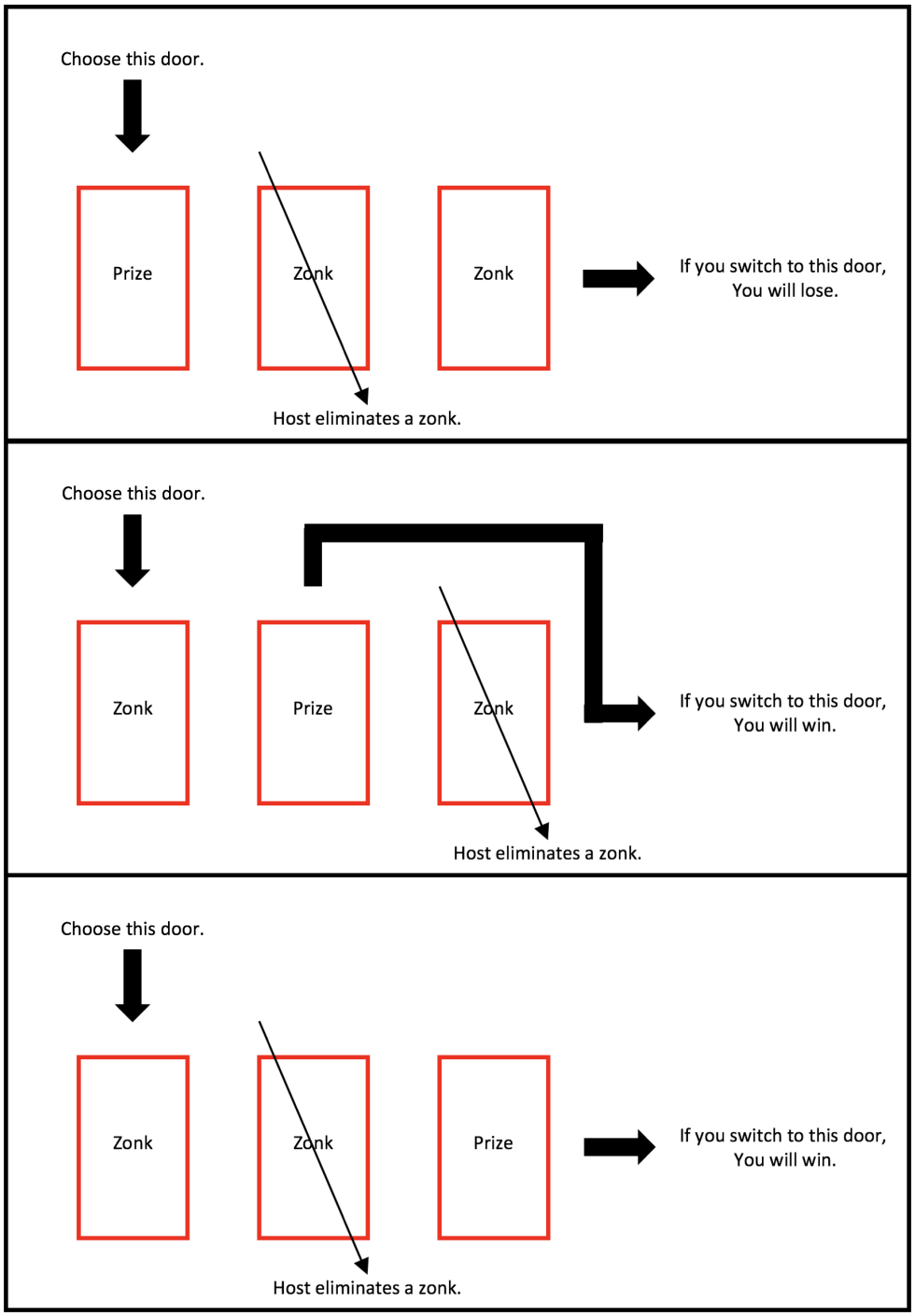

Math Games

There are thousands of math games which you can find all over the place. Some that you may be familiar with are sudoku, dots and boxes, chess, Rubik's cubes, and many many more. Today we will try a few that you have hopefully never heard of!

Sujiko

Sujiko consists of a 3 by 3 grid as well as 4 numbered boxes. The 4 adjacent squares surrounding each numbered box must have numbers which sum to the value inside the box. Additionally you can only use the numbers 1 to 9, and you must use each number exactly once.

Hint: A good way to start a Sujiko is to first look at the 4 numbered boxes, and in particular, the boxes with the largest and smallest value. The reason for this is that there are fewer combinations of addition which can add to either very small or very large numbers. (With four numbers, how many ways are there to add to 10? How about 30? How about 20?)

Example

Solve the following Sujiko!

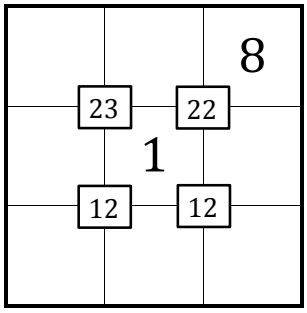

In this example, the biggest numbered box has a 23 in it. One of the squares surrounding it has a 1 in it, so that means the other 3 squares must add up to 22. There is actually only one way to do this, 9 + 7 + 6! There would usually be other ways, but they all require an 8 which has already been used in this puzzle.

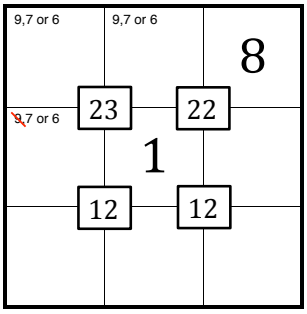

Now you can label all of the possible options each box can be. The 9 for the left middle square has been crossed out because if it were 9, it would be impossible to add to 12 for the bottom left box.

Next, lets look at the second largest valued box, the 22. We already have an 8 and a 1, so the other 2 squares must add to 13. We also know that the top middle square has to be either 9, 7 or 6. If it is 9, the right middle square has to be 4, if it is 7, the right middle square has to be 6, and if it is 6, the right middle square must be 7.

Would these last two options really work though? If we used either 6 or 7 in the right middle box, then we wouldn't be able to satisfy the options for the squares around the box with 23!

This leaves us with the only one possibility for the middle right square. It must be 4, which in turn means the top middle square must be 9!

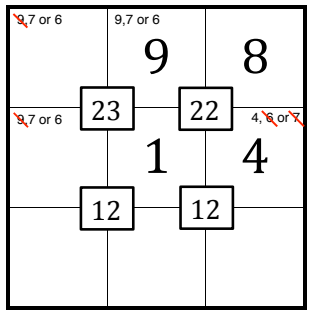

The only numbers yet to be listed are 2, 3 and 5. That means the bottom 3 squares must be some permutation of these numbers.

The bottom right box must have numbers around it adding to 12. We already have a 1 and a 4, so we need another 7 from the other two squares. The only way left to do this is with a 2 and a 5. We can say for sure that the 2 must go in the bottom middle square, because if the 5 were there, the numbers surrounding the other box would have no way to add to 12.

The only option left for the bottom left square is 3. Finally, the last squares to fill in are either the 6 or the 7. Checking both possible options, we can see that the finished puzzle must look like this.

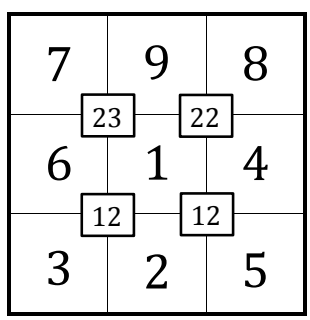

Another Useful Trick

An interesting mathematical property of a Sujiko is that the numbers in both diagonally opposite corners and the opposite diagonally opposite numbered boxes must sum to a number 45 greater than the number in the center box. This can be seen more clearly down below.

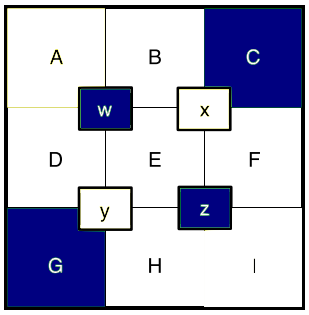

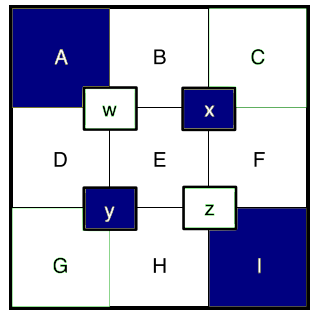

In the pictures above, the sum of each set of shaded boxes should be equal to 'E' + 45. This same rule applies for the shaded boxes of both pictures! How do we know this is true in general? Well lets do the addition and see if we can prove it!

Looking at the left diagram, the property tells us that $C + G + w + z = E + 45$. First of all, what do 'w' and 'z' equal?

$$\begin{aligned} w &= A + B + D + E \\ z &= E + F + H + I \end{aligned}$$

Now lets try adding everything together.

$$\begin{aligned} Sum\,Of\,Shaded\,Boxes &= w + z + G + C \\ &= (A + B + D + E) + (E + F + H + I) + G + C \qquad (1) \\ &= E + (A + B + C + D + E + F + G + H + I) \end{aligned}$$

Notice how we have 'E' plus one of every letter. We know each letter represents the value of one of the squares in the Sujiko puzzle, and because we have all 9 different letters, it means we will have all 9 different possible values which can be put into a Sukijo puzzle.

$$\begin{aligned} Sum\,Of\,Shaded\,Boxes &= E + (A + B + C + D + E + F + G + H + I) \\ &= E + (1 + 2 + 3 + 4 + 5 + 6 + 7 + 8 + 9) \qquad (2) \\ &= E + 45 \end{aligned}$$

If you want, you can check to see that this property really does work by using it on the Sujiko from our example on the previous page.

Problems

1. Prove the property from the previous page (sum of shaded boxes = 'E' + 45), except use the opposite corner squares and boxes.

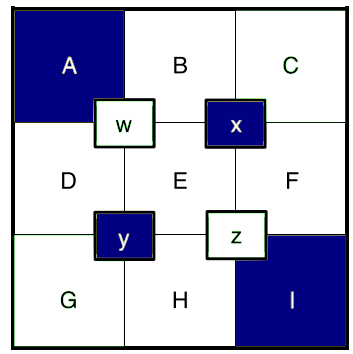

First find out what the sum of all of the shaded boxes is.

$$Sum\ Of\ Shaded\ Boxes = A + I + x + y$$

Now find out what x and y have to be.

$$x = B + C + E + F$$
$$y = D + E + G + H$$

Now that you know what x and y are, you can re-write the '$Sum Of Shaded Boxes$' equation as follows:

$$\begin{aligned} Sum\ Of\ Shaded\ Boxes &= A + I + x + y \\ &= A + I + (B + C + E + F) + (D + E + G + H) \\ &= E + (A + B + C + D + E + F + G + H + I) \\ &= E + 45 \end{aligned} \tag{3}$$

When we have each of the nine letters from A to I (like in the second last step above), we know that these will have to be the numbers 1 - 9 in some order. If we add the numbers 1 - 9 together, we get 45.

2. Solve each Sujiko.

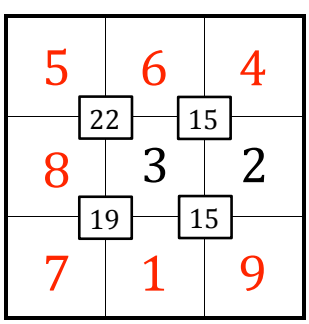

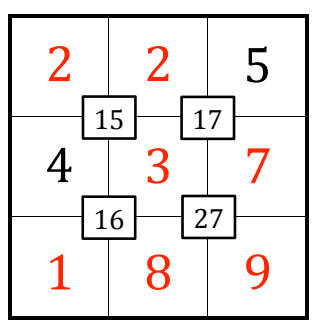

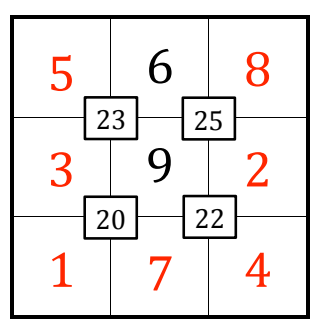

Hashiwokakero ("Bridges")

Hashiwokakero or "Bridges", is a game with various "islands" arranged in a grid. The goal of the game is to connect these islands using a series of perpendicular, vertical or horizontal lines. Each island will have a number assigned to it, and this number represents how many bridges must be connected to that particular island.

There can only be one system of islands (i.e. you must be able to walk from one island to all of the other islands without ever having to swim).

Bridges can only be built with straight lines. Bridges can never change directions. Bridges can't overlap other bridges.

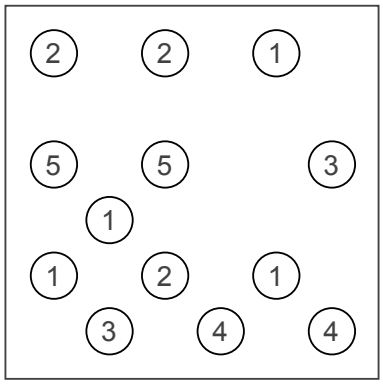

(a) An unsolved Hashiwokakero

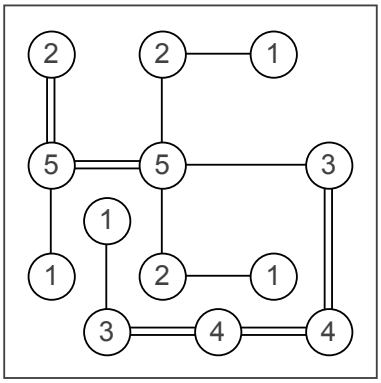

(b) A solved Hashiwokakero

Try to solve the following games of Bridges.

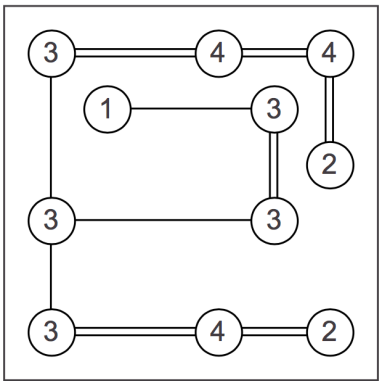

(c) 6x6

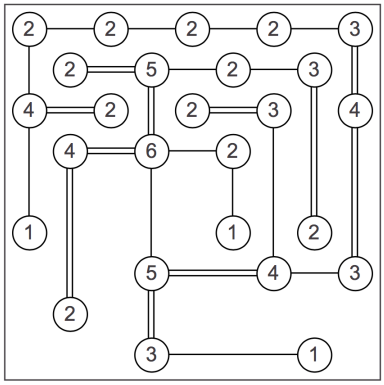

(d) 9x9

Hint: To start, find an island which can only have one possible connection!

Four Fours

This is one of my favourite math games. It is great for entertaining yourself on a long car ride, or during a line up at the doctors office. The rules are: Using only 4 of the number 4 and the basic algebraic operators (+, -, x, / and ()), write an expression for all numbers starting at zero and going upwards.

For the remainder of the period, we will have a contest (with a prize!) to see who can reach 10 the fastest. I have given you the first 3 numbers as an example of how to play.

0 = 4 + 4 - 4 - 4

1 = 44 / 44

2 = (4 / 4) + (4 / 4)

3 = (4 + 4 + 4) / 4

4 = 4 x (4 - 4) + 4

5 = (4 x 4 + 4) / 4

6 = 4 + (4 + 4) / 4

7 = 4 + 4 - (4 / 4)

8 = 4 + 4 + 4 - 4

9 = 4 + 4 + (4 / 4)

10 = (44 - 4) / 4

Going further past 10 can become very tricky with these rules. To make it much higher than 10, you need to introduce some other operators like exponents '4^4', factorials '4!', and square roots '$\sqrt{4}$'. Feel free to ask me if you want to know about these!